Annex II

Training Manual of Bamboo Charcoal

for Producers and Consumers

JIANG Shenxue

Bamboo Engineering Research Center

Nanjing Forestry University

May 2004

Abstract

Bamboo charcoal, outcome of pyrolyzing bamboo, is a sort of porous material with excellent adsorption, electromagnetic shielding, and infrared emitting capacity. Not only bamboo but also bamboo processing residues such as particle, sawdust, thread left in processing etc. can manufacture bamboo charcoal, which is named as bamboo briquette charcoal. Bamboo pyrolysis process can be divided into four stages according to temperature and products situation in a kiln or a pyrolyzing kettle, e.g. dry, pre-carbonization, carbonization, and refining or calcinations. Presented in the manual were the structure of a brick kiln and the process popular in bamboo charcoal production, the structure of mechanical furnace and bamboo briquette charcoal production process including how to make bamboo sticks with residues. The quality index weighs bamboo charcoal good or bad, so in this manual listed are the definition and significance of main quality index such as density, fixed carbon content, ash and volatile matter content, specific surface area, etc. Also introduced were the factors to influence bamboo pyrolysis process such as the terminal pyrolysis temperature, carbonization speed, the moisture content of bamboo and bamboo dimensions. Among these, the terminal carbonization temperature contributes most to bamboo charcoal quality and properties. The adsorption capacity of bamboo charcoal to methanal, benzene, methylbenzene, ammonia, and chloroform were determined by testing. In this manual, some of products taking advantage of bamboo charcoal were introduced. Finally, the production cost and profit manufacturing bamboo charcoal including bamboo briquette charcoal were presented.

Keywords: Bamboo charcoal; Bamboo pyrolysis; Production process and equipment; Adsorption; Utilization

Contents

Abstract……

i

1 Introduction ……1
2 An introduction of bamboo and bamboo charcoal……1
2.1 Chemical composition of bamboo ……2
2.2 A brief instruction of bamboo charcoal ……2
2.3 Bamboo charcoal throughput and market ……3
2.4 Classification……4
3 Basic knowledge of bamboo pyrolysis……6
3.1 Stages of the bamboo pyrolysis……6
3.2 Products of bamboo pyrolysis ……7
4 Production process and equipment ……9
4.1 Structure of a brick kiln and process for brick kiln ……9
4.2 Production process and equipment for mechanical furnace……16
5 Properties and quality targets of bamboo charcoal……22
5.1 Bamboo charcoal's fixed carbon……22
5.2 The content of volatile matter of bamboo charcoal ……22
5.3 Ash of bamboo charcoal……24
5.4 The mechanical strength of bamboo charcoal……25
5.5 The density bamboo charcoal……25
5.6 The electric conductivity of bamboo charcoal ……26
5.7 The specific surface area of bamboo charcoal……27
6 Factors influencing bamboo pyrolysis process……29
6.1 The terminal temperature of bamboo pyrolysis……29
6.2 The speed of pyrolysis ……29
6.3 The moisture content of bamboo……29
6.4 Bamboo's dimensions ……30
7 Adsorption capacity of bamboo charcoal ……31
7.1 Methanal adsorption capacity of bamboo charcoal……31
7.2 Benzene adsorption capacity of bamboo charcoal ……32
7.3 Methylbenzene adsorption capacity of bamboo charcoal ……32
7.4 Bamboo charcoal's adsorption to ammonia……33
7.5 Bamboo charcoal's adsorption to chloroform……34
8 Utilization of bamboo charcoal ……35
8.1 The exploitation of adsorption capacity of bamboo charcoal……35
8.2 Using the emitting infrared ray property of bamboo charcoal ……40
8.3. Use of bamboo charcoal in deodorant and preservative……41
8.4 Other use of bamboo charcoal……42
9 Cost and revenue of bamboo charcoal and briquette charcoal……44
9.1 cost and profit of bamboo charcoal……44

9.2 Bamboo briquette charcoal cost and revenue……46

1 Introduction

Bamboo plants are identified as species of subfamily *Bambusoideae*, family *Gramineae*. They are distributed in many parts of the world. There are more than 1200 species of 50 genera of bamboo. There is approximate 22 millions ha bamboo forest area worldwide that can be divided into three big divisions e.g. Asia and Pacific, America and Africa. China, India, Southeastern Asian nations, some of nations of Africa and Latin America are rich in bamboo resource (Zhou 1998). Among them, China is richest of bamboo forest because of locating at the center region of bamboo distribution. In China, there are approximate 400 species of 35 genera of bamboo, which is one third of total species in the world. The total bamboo forest area in China is 7.2 millions ha including pure bamboo forest area 4.2 millions, mixed bamboo forest with trees and bamboo cluster on mountains 3.0 millions ha.

Bamboo grows rapidly and matures in 4 to 8 years. Generally sympodial species mature earlier than monopodial ones. Its specific gravity and mechanical strength remain in good status and it is the best time to utilize it during mature period. Moreover, since forming bamboo forest, we can harvest bamboo culms every year. In other words, bamboo is a sort of renewable organic resource for sustainable development.

Since 1980', because of the rapid reduction of tropic forest, people recognized the significance of bamboo cultivation and utilization, especially in China. Bamboo utilization developed very quickly, and variety of bamboo processing machines emerged to replace hand jobs. As a result, various bamboo-based panels such as ply-bamboo, laminated bamboo sliver board, bamboo flooring, bamboo and wood composite products, and bamboo veneer coasted boards etc. were successfully developed and now a kind of new bamboo processing industry has formed in China (Zhang et al 1995).

But making bamboo-based panels doesn't complete overall use of bamboo culms. It only uses the medium portion of a bamboo culm. Moreover, a lot of small diameter bamboo and sympodial bamboo with thin wall can't be used to make bamboo-based panels. So people pay more attention to chemical utilization of bamboo, which use not only overall culms but also almost every bamboo species. At present, main chemical processing methods include distilling from bamboo leaves and pyrolyzing bamboo to get bamboo charcoal and bamboo vinegar. The later was proved to be a benefit and practicable way to make bamboo overall use. Besides the tip and base portions of bamboo can be used to make charcoal, tremendous processing residues left in producing bamboo based panels and daily articles such as bamboo chopsticks, bamboo mat, bamboo toothpicks etc can be made into bamboo briquette charcoal by a series of procedures. So making bamboo charcoal and its products is a way utilizing bamboo efficiently and widening the field of bamboo use (Zhang 2002).

2 An introduction of bamboo and bamboo charcoal

2.1 Chemical composition of bamboo

The macrostructure of bamboo stem is similar to many species of grass family with distinct nodes and internodes. Analyzing chemical components of bamboo shows the bamboo is mainly composed of cellulose, hemicellulose, lignin, carbohydrates, fat and protein, etc. The cell wall mainly consists of cellulose, hemicellulose and lignin (Chen 1984).

The cellulose of bamboo is a natural linear macromolecular compound which is jointed with ß-D-glucosel - 4 glycocidic. The cellulose content in bamboo varies from 40% to 50% with different species.

Hemicellulose is a kind of non-cellulose polysaccharide, inhomogeneous high polymeric glycan, which consists of two glycosyl or more in the cell wall and the intercellular layer. It has a branch structure. The hemicellulose's content is in the range of 20% to 30%.

Lignin is an aromatic macromolecular compound together with cellulose and hemicellulose in lignified tissue, and it is concentrated in intercellular layers. In the lignified tissue, the lignin is mainly to stick the cellulose and hemicellulose and its content ranges from 15% to 35%.

The materials such as carbohydrate, fat, protein and nitride etc can be extracted from bamboo. The cold-water extractive is 3.92%, and the hot-water extractive is 7.72%. The alcohol-ether extractive is 4.55%, and the alcohol-benzene extractive is 5.45%. The extractive with 1% sodium hydroxide is 27.26%,

Bamboo material can be burned to ash in high temperature. The ash content is in the range of 1% to 2%. The compounds of the ash exist in following forms: Potassium exists as potassium oxide which is in the range of 0.5% to 2%; Silicon exists as silica is about 1.3%; Phosphate exists as phosphorus pentoxide and is the range of 0.11%~0.24%. Besides these compounds, there are some metallic elements with little content such as copper, iron, calcium, magnesium and manganese.

Compared with the chemical composition of wood and grass plant, the cellulose content of bamboo is higher than grass plant, less than hardwood, and similar to softwood. The lignin content of bamboo is between softwood and hardwood but higher than grass. The ash content in bamboo is 3 to 4 times more than wood but far less than grass (Ye et al 1989).

2.2 A brief instruction of bamboo charcoal

Similar to wood charcoal, bamboo charcoal is a micro-porous material with excellent adsorption property for its large specific surface area. Adsorption of bamboo charcoal is theoretically classified into physical adsorption and chemical adsorption. Physical adsorption

is caused by molecule acting force (van der Waals force) between adsorbent and adsorbate that doesn't change the surface composition of adsorbent and the situation of the molecule of adsorbate. Chemical adsorption is by chemical bond between adsorbent and adsorbate in which the exchange and transference of electrons happen to result in rearrange of atoms and chemical bond formation or destroying.

Physical adsorption goes fast and is reversible. It usually carries through in lower temperature without selection and acts in monolayer or multilayer because there is van der Waals force on one layer of molecule of adsobate.

Similar to chemical action, chemical adsorption needs activation energy. It is not reversible and usually carries through in higher temperature companying chemical output. It is always monolayer adsorption with distinct selection.

The electric conductivity of bamboo charcoal will be reinforced with the rising of terminal pyrolysis temperature. When terminal pyrolysis temperature reaches 700℃, the resistance in bamboo charcoal becomes very small, only 5.40×10^{-6} Ω . M, meaning good conductivity. Therefore, bamboo charcoal carbonized under high temperature has effective property for shielding electromagnetism.

As the industrialization worldwide speeds up, air pollution and water pollution are becoming serious environmental problems. Bamboo charcoal is functional material for environment protection and developed fast in recent years for the reasons that (1) the wood that can be used as high-grade charcoal reduced rapidly and almost exhausted; (2) the harvest cycle of bamboo is short because it grows very fast. As a result, making bamboo charcoal doesn't destroy forest and environment; (3) bamboo charcoal are similar in properties to and can replace the high quality wood charcoal made from hardwood; (4) bamboo charcoal is good in strength and easy to process into different shapes.

At present, a series of bamboo charcoal products have been manufactured by taking advantage of the excellent adsorption and infrared radiation. These products involve in a variety of fields such as purifying drinking water and indoor air, adjusting humid in house, health care, odor adsorption, bamboo charcoal arts and so on. Some of products with shielding electromagnetism and anti-radiation are in research.

2.3 Bamboo charcoal throughput and market

China and Japan are main bamboo charcoal manufacturing nations in the world and 90 per cent of productivity is among southern Chinese provinces such as Zhejiang, Anhui, Fujian, and Jiangxi etc. especially Zhejiang Province is the leader. It was statistical that the throughput of bamboo charcoal in mentioned provinces has been approximately 40000 tons a year.

Because bamboo culms are difficult to be transported to a long distance for their hollow configuration, most of the bamboo charcoal enterprises in Chinese Mainland are in a small scale and locate in bamboo forest mountains or the areas nearby many bamboo processing plants so as to obtain bamboo culms or processing residues easily which are used for making bamboo briquette charcoal.

Japan, South Korea, Taiwan Province of China and Chinese Mainland are the main countries-area in using bamboo charcoal. Japanese likes to use bamboo charcoal in daily living. For example, they use bamboo charcoal for purifying drinking water, place some of slice bamboo charcoal in cooking rice and in the rice container, lay particle bamboo charcoal under floor or behind wallboard for adjusting indoor humidity, put bamboo charcoal into a refrigerator for getting rid off odor, use the mattress, pillow, and insoles that are filled with bamboo charcoal. In 2002, over 10000 tons of bamboo charcoal manufactured in Zhejiang Province exported to Japan and South Korea, most of them to Japan. South Korean often goes to barbecue roasted with bamboo charcoal. In China, people used to make and use wood charcoal in a very long period of time. But now Chinese, especially the in eastern China, have recognized the importance of bamboo charcoal and used it. So bamboo charcoal product consumers are continuously and rapidly rising. Recently, some of companies in Europe and North America are going to import bamboo charcoal from China, and a little sample shelved in some stores.

2.4 Classification

There are several sorting methods. In accordance with the shape of raw material, bamboo charcoal can be divided into (1) raw bamboo charcoal (Fig. 1) made of bamboo culms which were cut into a certain length and then loaded into a kiln to dry, heat and pyrolyze under the condition of lacking or little oxygen and (2) bamboo briquette charcoal (Fig. 2) made up of bamboo particles and processing residues which was broken, dried, formed into briquette, and then pyrolyzed.



Figure 1. Raw bamboo charcoal



Figure 2. Bamboo briquette charcoal

According to its shape, bamboo charcoal can be classified into round (Fig. 4), slice (Fig.5),

particle (Fig.7) and powder charcoal（Fig.6）According as its use, bamboo charcoal can be divided into water depuration, humidity adjustment, odor adsorption, health care, agriculture, fuel of barbecue etc. Due to the lack of a national standard, the terms might be different in different regions.

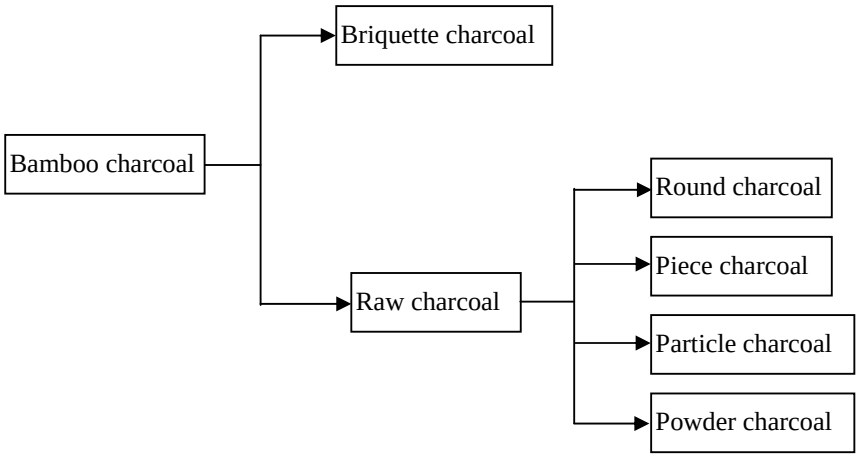

Figure 3. Classification of bamboo charcoal



Figure 4 Bamboo round charcoal



Figure 5 Bamboo slice charcoal



Figure 6 Bamboo powder charcoal



Figure 7 Bamboo particle charcoal

3 Basic knowledge of Bamboo Pyrolysis

Bamboo pyrolysis, including bamboo carbonization, bamboo destructive distillation, bamboo activated carbon and bamboo gasification, etc is a manufacturing method which makes bamboo heated to form many pyrolysis products under the condition of isolating air or letting little air in.

a. Bamboo carbonization: bamboo is heated in brick kilns or mechanical kilns with little air by means of the beat energy generated by burning firewood to pyrolyze bamboo and produce bamboo charcoal.

b. Bamboo destructive distillation: bamboo is heated in a pyrolyzing kettle isolating air to produce bamboo charcoal and bamboo vinegar and so on.

c. Bamboo activated carbon: the bamboo material is heated in a brick kiln and activated kiln to get bamboo activated carbon.

d. Bamboo gasification: bamboo or bamboo residues resulting from the processing are heated to get bamboo gas in a gasification kiln (Huang 1996).

3.1 Stages of the bamboo pyrolysis

Bamboo pyrolysis can be divided into four stages according to temperature and products situation in a kiln or a pyrolyzing kettle.

Firsts stage —drying: the temperature is below 120℃ and the speed of pyrolysis is very slow in this stage. Because of adsorbing external to heat evaporates the water in bamboo, the chemical composition of the bamboo is still intact. Consequently, this stage is endothermic reaction and water is the major product in this stage.

Second stage — pre-carbonization: the temperature is in the range of 120℃ to 260℃ and there is a distinct pyrolysis reaction in bamboo during this stage. The unstable chemical compounds in bamboo (i.e. hemicellulose) began to decompose into carbon dioxide, carbon monoxide little vinegar, etc. this stage is also an endothermic reaction.

Third stage — carbonization: the temperature is in the range of 260℃ to 450℃, and the bamboo is rapidly decomposed into many liquid and gas products. Liquid products contain much acetic acid, methanol and bamboo tar. Flammable methane and ethylene in gas products are increasing while carbon dioxide decreasing gradually during this stage. Because

a lot of heat emits from bamboo, this stage is an exothermic reaction.

Fourth stage — calcinations (refining stage): the temperature is over 450℃. The bamboo is becoming charcoal by means of providing a mass of heat, emitting the volatile substances in the charcoal and to enhance non-volatile carbon of charcoal. carbon. There are few liquid and gas product in this stage. Refining stage is the key to upgrade the quality of bamboo charcoal. Based on the temperature in this stage, the bamboo charcoal can be divided into three groups (low-temperature charcoal, middle-temperature charcoal and high-temperature charcoal).

It should be noted that it is difficult to delimit these four stages because different places of a pyrolyzing kettle are heated differently. Bamboo culms located in different places of a pyrolyzing kettle (the top or the bottom) might exist in different pyrolysis stages; the difference might happen between the outer and the inner parts of bamboo culm. But we can see the distinct change of temperature during the exothermic reaction stage in an intermittent pyrolyzing kettle in which the temperature in the pyrolyzing kettle is going up rapidly while heating power keeps stable (Huang 1996).

3.2 Products of bamboo pyrolysis

There are three groups of pyrolysis products: they are solid (bamboo charcoal), liquid (bamboo vinegar) and gas (bamboo gas).

Bamboo destructive distillation is carried out in a one-kilogram-retort in a lab, and the pyrolysis time is about 8 hours. The products of bamboo pyrolysis are shown in table 1.

Table 1 The contents of products of bamboo pyrolyzed at the terminal temperature of 500℃

Bamboo charcoal	Bamboo vinegar	Bamboo gas	Loss
30%	51%	18%	1%

Note: Percentage of the products made from oven-dry bamboo

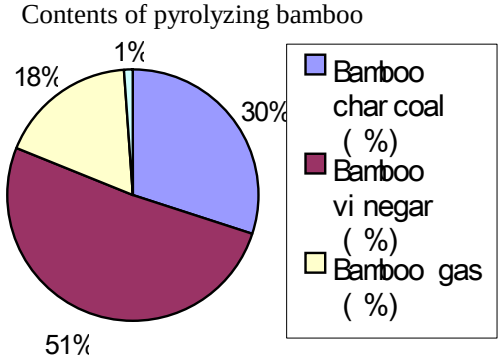

Figure 8 Contents of pyrolyzing bamboo at terminal temperature 500℃

1) Solid products

The bamboo charcoal is the solid product left in the carbonizing kettle after the bamboo culms are pyrolyzed. The bamboo charcoal has micro-hole in structure and excellent adsorption. Its characters and uses are shown in chapter 5, chapter 7, and chapter 8.

2) Liquid products

The compounds including vapor and gas are collected from the pyrolyzing kettle and condensed into liquid products (bamboo vinegar) and gas products (non-clotted gas and bamboo gas)

Crude bamboo vinegar is a brown-black liquid with more than 300 organic compounds except a quantity of water (include reaction water). Some of the compounds are as follows (Huang 1996):

(1) Saturated acid: acetic acid, formic acid, propanoic acid, and butanoic acid

(2) Unsaturated acid: propenioc acid

(3) Hydroxyl-acetic acid: 2-hydroxyl-acetic acid

(4) Heterocyclic acid: β -furancarboxylic acid

(5) Alcohol: methanol

(6) Un-alcohol: allyl alcohol

(7) Ketone: acetone, methyl ethyl-ketone, methyl propyl-ketone, and cyclopentanone

(8) Aldehyde: formaldehyde, ethyl-aldehyde, and furol

(9) Ester: methyl formate, methyl acetate

(10) ArOH: phenol, methyl-phenol, and O-benzenediol

(11) Lactone: butyrolactone

(12) Aromatic substance: benzene, toluene and naphthalene.

(13) Heterocyclic compounds: furan, and α -methyl furan

The crude bamboo vinegar can be divided into two layers by setting for two months. The upper layer is clarified bamboo vinegar, which is a light yellow or light brown liquid with special smell, and the lower layer is sediment-bamboo tar.

3) The gas products

The bamboo gas obtained from bamboo pyrolysis is mainly composed of carbon dioxide,

carbon monoxide, methane, ethylene and hydrogen, etc. the bamboo gas can be used as fuel.

4 Production process and equipment for bamboo charcoal

When people began to manufacture bamboo charcoal 10 years ago, they adopted an ancient way of making wood charcoal, which got charcoal by building kilns with stick soil. First dig into a certain depth as the base of carbonization room according to the dimension of a kiln on a chosen ground, and then build the carbonization room with stick soil. After that, build burning room in front of carbonization room and then air-dry the kiln. When loading, all bamboo culms stand in the kiln with base portions up. To make bamboo charcoal has to carry out a series of procedures such as igniting, heating and drying, pre-carbonizing, carbonizing, calcining, sealing kiln, cooling, and unloading. This method was difficult to ensure the quality of bamboo charcoal.

Because of the development of environment protection and health care functions of bamboo charcoal, its products attract attention of people and the productivity is increasing. To improve and enhance its quality, the production process and equipment are much better after 10 years of improvement. At present, there are two main kilns or furnaces e.g. pear type brick kiln, which is used to manufacture bamboo charcoal, and mechanical furnace, which is usually used to produce bamboo briquette charcoal.

4.1 Structure of a brick kiln and technological process for brick kiln

4.1.1 Structure of pear type brick kiln

The location requirements of kilns are: (1) nearby bamboo resource, (2) a wide flat for stacking bamboo, bamboo charcoal, and firewood, (3) enough water and electricity, and (4) solid and stick soil ground. A typical double brick kilns are shown in Fig.9.

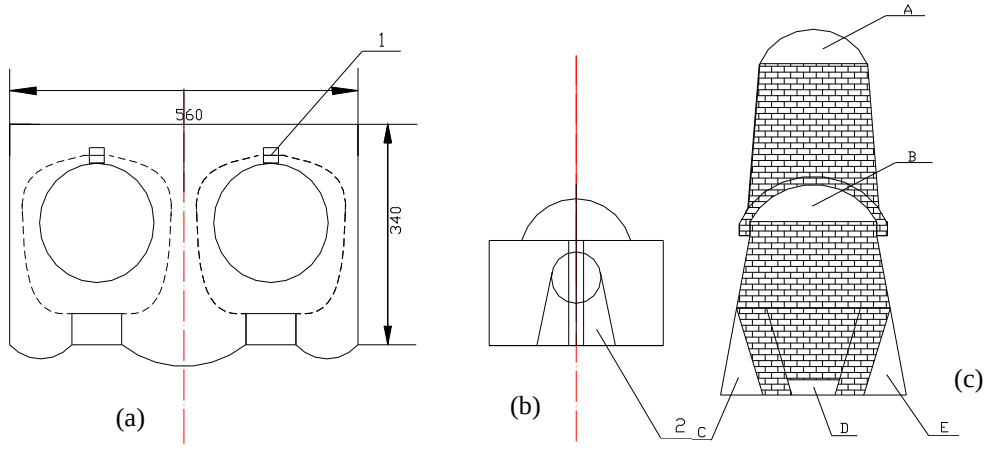

1.flue 2 side wall A.B firewood intakes C, D, E air intakes

Figure 9 Diagrammatic sketch of the structure of a typical double brick kilns

The vertical and lateral views of the double kilns are shown in Fig.9 (a) and (b), and the dimension measures 3.8 meters in length, 2.8 meters in width and 2.5 to 2.7 meters in height with wall 24 cm thick. The building process is as follows: First of all, 15 to 20 cm thick stones are levelly paved on the ground, covered by a layer of loess 20 cm thick. Then bricks are laid on the loess. After building the kiln with bricks a layer of loess 20 cm thick are laid

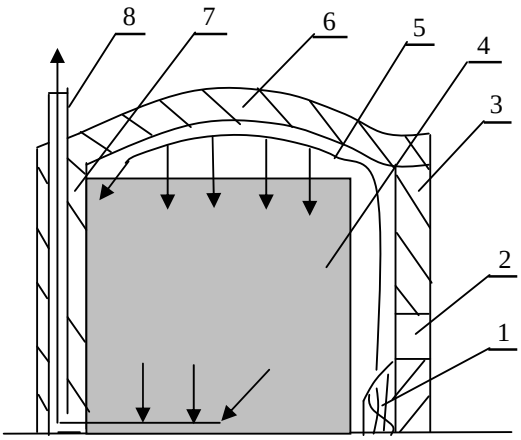

1. firewood 2. entrance of firewood 3. front wall 4. bamboo sticks 5.smoking track 6. roof made of brick 7. back wall 8. chimney

Fig. 10 sketch map of a brick kiln heating bamboo charcoal

on the top, which serves to keep out the moisture and preserves the heat. The flue of 100 × 100 cm is situated at the back.

Fig.9 (c) depicts an explicit illustration of a kiln gate, which is 1.5 meters high, with 50 cm wide at the bottom and 40 cm wide on the top. There are five intakes on the kiln gate. Intakes A and B serve not only to add firewood, but also to observe flame and burning situation. Intakes C, D and E, mainly used to control the increase rate of interior temperature by adjusting their opening. This type of kiln has a capacity of four to six tons of bamboo and consumes two tons of firewood in a cycle. The heating of a brick kiln is depicted in Fig.10.

Measures are taken to prevent the air pollution by smoke emitted in the process of charcoal making. The specific procedures are as follows: Make two holes in a jar, one is square (10 × 10 cm) and the other is round. Next, build a passageway with bricks connecting the square hole and the flue rim to let smoke go through. Take four or five bamboo culms with eight meters in length, remove the internal joint layers. Then put one end of them into the jar, and fix the other end on the beam. Seal the jar completely with plastic films and earth. After doing so, the smoke coming from the kilns has to pass through the jar and the bamboo culms. Inside the inner walls of bamboos, the smoke condenses into liquid (crude bamboo vinegar) and then drops down into the jar. The liquid flows out through a plastic pipe connected to the round hole on the jar. What is collected is crude bamboo vinegar. See the following Fig.11.



Figure 11 the instrument for condensing smoke and colleting crude bamboo vinegar.

4.1.2 Production process of bamboo charcoal

A practice production process is shown in Fig.12

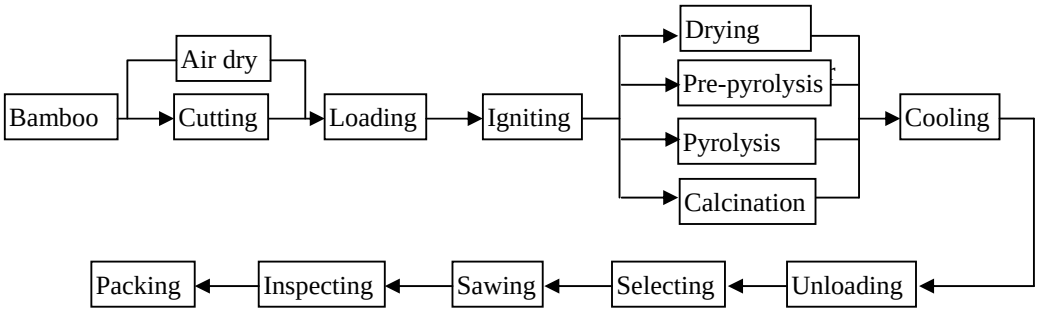

Figure 12 Production process flow chart of bamboo charcoal

4.1.3 Raw material requirements:

To enhance quality and productivity of bamboo charcoal, the bamboo culms must be matured (growing over 4 years) and fresh. Punk culms can't be used as raw material because the bamboo charcoal made from punk culms is loose and brittle and apt to self-ignited. Moreover, the density, cavity structure and tissue composition of bamboo culms differentiate from bottom portion to tip. Meanwhile, the quality of bamboo is influenced by its age, land and soil condition, and climate. So it is reasonable to divide the culms into three parts (the upper, the middle and the lower) for processing. If possible, the culms may be divided with the consideration of age and soil conditions. There are abundant nutrient substances in bamboo, so it is apt to be moldy. Therefore the storage time of bamboo materials should be strictly controlled, especially in summer. The newly cut bamboo culms should be processed and dried rapidly and loaded into kiln as soon as possible to protect their quality. The

moisture of bamboo influence bamboo production. The drying period of bamboo pyrolysis will prolong if the moisture content is too high, and as a result, the carbonizing process will



Figure 13 the bamboo culms sawed down

extend with more fuel consumption. On the other hand, the bamboo culms are easy to cause cracks because of not being heated uniformly in the kiln when drying rapidly, and this degrades bamboo charcoal. Natural dry and manual dry are usually adopted. In small plants, the natural or air dry is popular, e.g. place bamboo culms on the bases and let them air dry in a certain time to the moisture content of 15% to 20%. The bamboo segments sawed down are shown in Fig.13.

4.1.4 Description of main procedures

(1) Loading

Cut bamboo culms into segments or pieces according to inner height of the kiln and load them into the kiln. The bamboo segments are arranged vertically with the tip portion downward. Loading begins from tail of the kiln toward the gate, leaving 0.5 m between the bamboo stack and kiln gate for combustion of firewood. Then the door is sealed with bricks and clay, leaving the arc intake for igniting and feeding firewood.

(2) Igniting

It means to ignite the firewood lying behind the kiln gate and then close the top two intakes on the gate when the firewood is burned, leaving two intakes at the bottom of the gate to keep the hot flow circulating in the kiln and go out through the flue at the tail of kiln. At beginning, a small hole at the top of gate is necessary to let the smoke out and firewood burning easily. When the inflammation goes, seal the top small hole (see Fig.14).



Figure 14 The igniting and sealing after igniting

(3) Heating (dry and pre-carbonization stages)

It is a process raising the temperature inside the kiln by dismounting the arc-feeding intake on the gate everyday and feeding firewood to keep burning. Once finished feeding, the feeding intake should be sealed again. Usually the feeding keeps 2 to 3 times according to combustion that can be adjusted by changing the opening of bottom air intakes on the gate. To avoid feeding firewood at midnight, it is necessary that not only the feeding intake but also the air intakes should be sealed after last feeding in the evening every day. Of cause, the air intakes couldn't be sealed completely and leave a small portions to remain slow combustion. The bamboo in the kiln will crack if the temperature escalates quickly. The temperature in the kiln should be controlled under the self-igniting point of bamboo in seven to eight days after igniting. Firewood feeding should be decreased or stopped if the temperature is enough. Blocking the intakes and flue rim with bricks can regulate the temperature in the kiln. Figure 15 is a curve of heating, which delineates the change of the temperature in the process of heating.

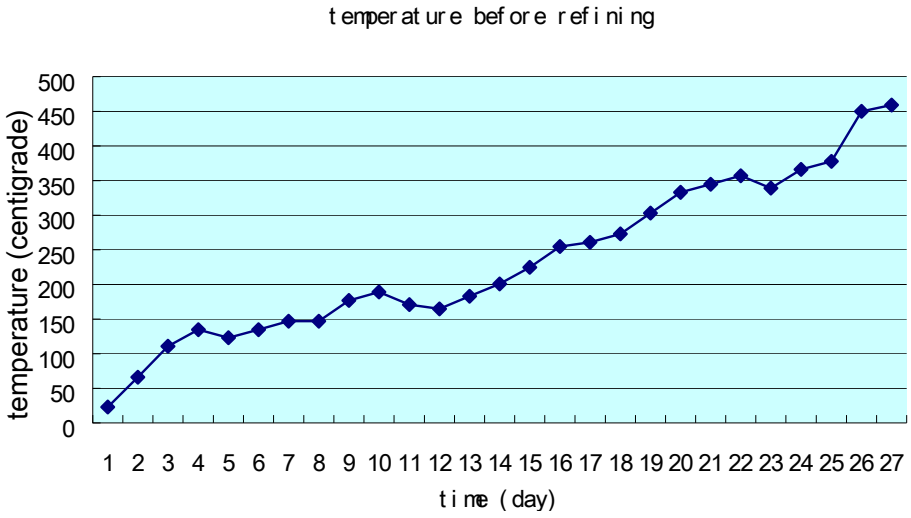

Figure 15 Heat escalating day after day in the heating stage

(4) Carbonizat

When the temperature in the kiln reaches 260℃, bamboo will be decomposed rapidly and give out a lot of offspring and reaction heat. When it is over 450℃, bamboo pyrolysis enters

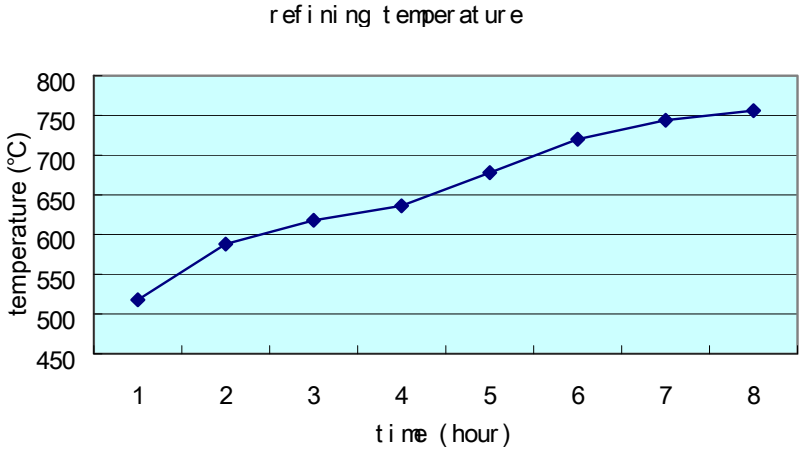

Figure 16 The curve of temperature – time during refining stage

into refining or calcining stage. In fact, it is a contracting process of high temperature pyrolyzation for improving the quality of bamboo charcoal and enhancing its hardness as well. After the end of heating open the intakes on the gate and feed more firewood quickly to raise the temperature inside the kiln. In this process, the intakes of kiln gate shouldn't be opened wholly in a short time, and they are to be opened gradually within twenty-four hours or so to make the bamboo charcoal contracted absolutely. At the end of refining stage, all the

intakes should be opened again for one or two hours to raise the temperature of the charcoal in the kiln to 1000℃ or more. Fig. 16 depicted the curves of temperature during the refining stage. The beginning and ending of refining process will be controlled according to the temperature on the curve. The kiln gate situation at the end of refining is shown in Fig.17



Fig.17 The kiln gate situation at the end of refining

In practice, workers, especially in small plant, determine the carbonization stages by watching the color and smelling the smoke coming out from the flue. At the beginning of drying, the smoke shows white color containing a lot of steam, and then slight acid smelled. Beginning carbonization, the smoke shows slight yellow companying with tar smell. When smoke color turns to slight blue, it indicates the end of carbonization and the start of refining.

(5) Sealing for cooling and unloading

The kiln gate must be fully sealed with brick and mud pile at the end of refining, and let the bamboo charcoal in kiln cools naturally. If the kiln is not sealed well, bamboo charcoal inside will be easily oxidized. The cooling time depends on weather. Usually it takes five to six days. When temperature in the kiln is lower than 50℃, it is the time of put out the bamboo charcoal. At first the gate should be opened little to note if the bamboo charcoal re-burns and then opening the gate completely. The kiln gate sealed is shown in Fig.18. Bamboo charcoal in the kiln after cooling is shown in Fig. 19.



Figure 18 the gate after sealing



Figure 19 the bamboo charcoal cooling in kiln

4.2 Production process and equipment for mechanical furnace

At present, the mechanical furnace is used to manufacture bamboo briquette charcoal, which is first formed into bamboo particle sticks made of bamboo processing residues, bamboo tips and base of bamboo culms, and then pyrolyzing into product in a mechanical furnace.

4.2.1 Production process for bamboo particle stick

It is shown in Fig.20

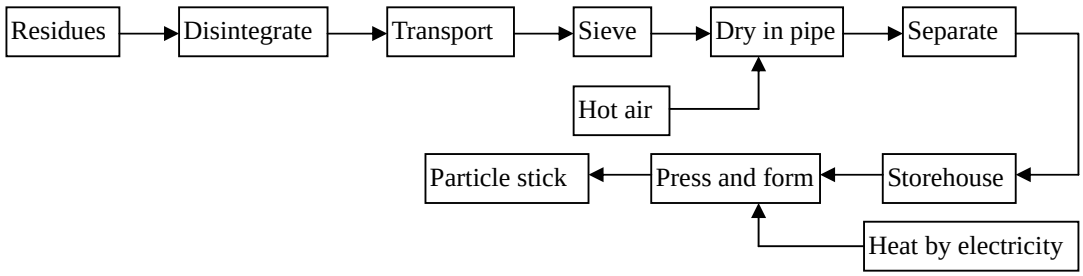

Fig.20 production process for bamboo particle stick

Fig.21 depicts the diagrammatic sketch of particle stick production line

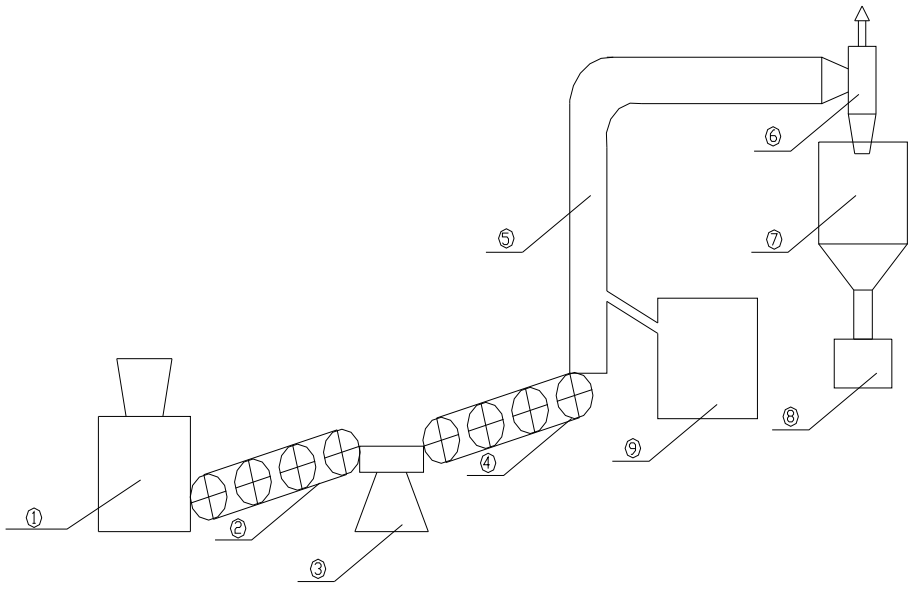

1.disintegrator 2、4.belt conveyor 3.screen 5.pipeline 6.cyclone separator

7. hopper 8. particle forming machine 9. heating furnace

4.2.2 Raw material

Bamboo particle sticks are usually made of the bamboo processing residues such as particles, powder, sawdust, truncation portions, different thread etc. and a little of the tips and base of bamboo stem. The moisture content of the raw material should be dried to the standard of air-dried material. Besides that, the soil and stones mixed in the raw material should be removed. Fig.22 shows the processing residues.



Figure 22 Processing residues

4.2.3 Disintegrating and conveying

It is the process of feeding the raw material into a disintegrator (Fig.23) to break them down, and then the disintegrated particles will be conveyed on a belt into a sieve to be screened. The fine particles with the size of 10 meshes are carried into the vertical pipeline by belt transporter. The coarse particles will be turned back to the disintegrator again. Regular particles will be transported into a vertical pipeline where they are mixed with hot air coming from a heating furnace. They are to be dried and transferred into a hopper by an air current transportation system. The temperature of hot air is 85 ℃. The belt deferent speed is



Figure 23 Workers are feeding a disintegrator

50 m/min and the diameter of roller of transporter is 0.7 meters.

4.2.4 Drying

The regular bamboo particles will be dried in the vertical pipeline and transported to the hopper by air current transportation system and then pass through the cyclone separator to fall into the hopper. The moisture content of particles after drying should be within the range of 4% to 6% before feeding into a screw-forming machine.

4.2.5 Extruding into stick

The regular particles in the hopper are fed into the screw-forming machine, which is heated by electricity to 160℃, and extruded into sticks. The outline of screw forming machine is shown in Fig.24.



Figure 24 Screw forming machine

Figure 24 Screw forming machine

Particle sticks (see Fig.25) are the raw material of stick charcoal. It can be pyrolyzed in both brick kilns and mechanical furnaces.

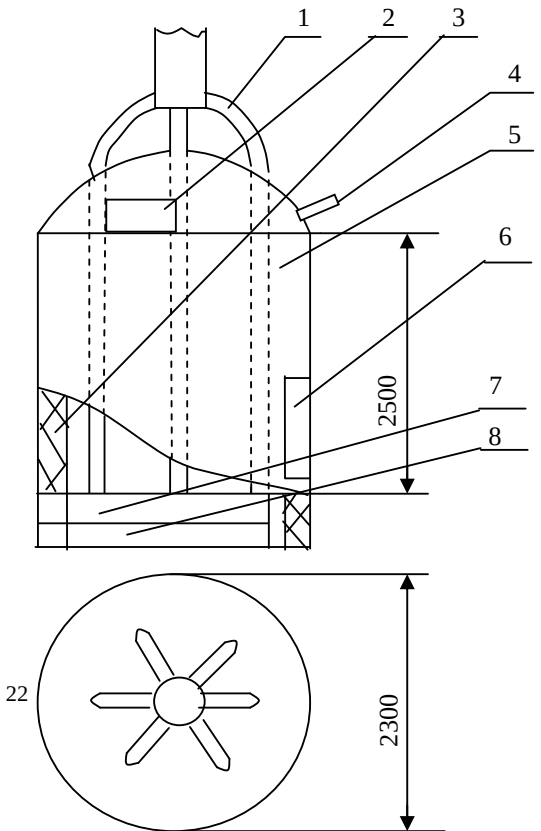

1 smoke channel 2 top intake 3 firebrick 4 thermocouple 5 body 6 bottom intake 7 fuel feeding 8 ash exit

Figure 26 Structure of a mechanical furnace

4.2.6 Structure of a mechanical furnace

A mechanical furnace is depicted in Fig.26. It is 2.5 meter high and 2.3 meter in diameter. The body is made of thin steel sheet lined with firebricks and coated with heat preservation material. There are two intakes on the body. One is fixed in the upper part and the other is lower that serve as for raw material loading. Near the bottom of body is a fuel feeding intake and a hole for ash exit. There are 4 thermocouples in the furnace for measuring the temperature at different points. Two of them are situated at the upper part and the other two at the bottom. So workers can adjust the combustion situation and master the product quality in accordance with the feedback temperature from the thermocouples. There is a grid with protuberant center below the fuel intake in the furnace. So the furnace can burn either coal or firewood. The outline of mechanical furnaces is shown in Fig.27



Figure 27 Outline of mechanical furnaces

4.2.7 Main procedures

The production process for the mechanical furnace is similar to that for brick kilns. The furnace is mainly used in the bamboo stick charcoal production at present. The main procedures are introduced as follows:

(1) Loading and igniting

At the beginning, particle sticks are loaded in through the lower intake until half of the furnace space is loaded. Then other sticks can be loaded in through the upper intake. When the furnace is full, the upper intake ought to be completely covered and sealed. After ignited the firewood on the grim, firewood or coal should be continuously fed to keep inflammation.

(2) Heating (pre-carbonization and carbonization)

At the initial stage, the heating not only increases the temperature in the furnace but also eliminates the moisture content in the raw material. The temperature should be enhanced

tenderly to avoid material cracking that will happen if the temperature rises quickly. It is recommended that the temperature in the furnace should be raised to 140℃ to 160℃ in 24 hours. The material begins to carbonize at 180℃ and vinegar starts flowing. When it reaches 450℃, the smoke comes from chimney change into light blue color, and this indicates that material carbonizing is completed. During carbonizing stage, a lot of bamboo vinegar and tar are pyrolyzed and flowed out. So the speed of temperature rising should coordinated with the speed of liquid flowing to get more byproducts. Fig.28 depicts the process of temperature rising in the furnace during the heating, carbonizing and refining stages.

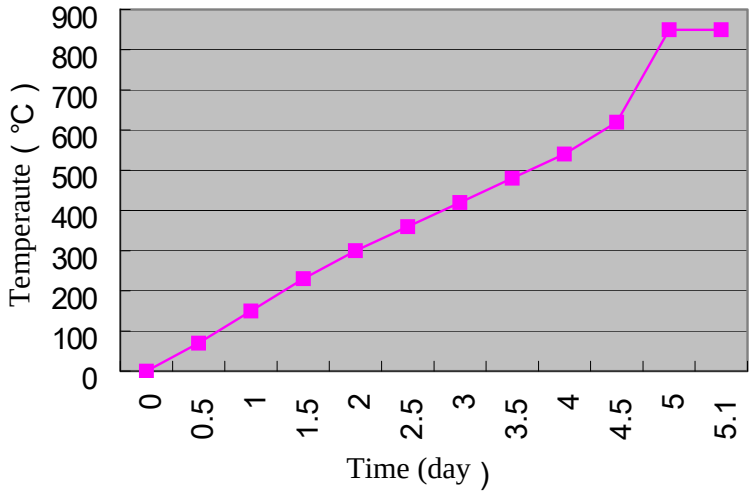

Figure 28. The temperature rises with time during heating, carbonizing and refining.

(3) Refining

The temperature should be enhanced rapidly to 850℃ in 24 hours in this stage (see the temperature change during 5th day in Fig.28) , and then keep it for several hours so as to carbonize the bamboo charcoal further.

(4) Cooling and unloading

When the refining process is finished, the intake should be sealed to let the air in furnace be cooled. When the temperature in the furnace falls under 60℃, the charcoal can be taken out.

4.2.8 Character of mechanical furnace

It has the characteristics as follows:

- Short production cycle. Usually production cycle lasts 6 to 7 days.
- Good product quality. The pyrolyzing process of bamboo charcoal coheres with its refining process because of consistent temperature during carbonization.
- High yield rate. The yield rate of bamboo stick charcoal reaches 30%.
- Easy to control. Several of measurement points can be designed to inspect and control the temperature in the furnace by workers.
- The disadvantage is higher investment than that of brick kiln and it should be maintained and repaired by professional workers.

5. Properties and quality targets of bamboo charcoal

In this experiment, it was implemented to make bamboo into distillation under different temperature (300-1000℃), measure and analyze the fundamental properties of bamboo charcoal. The result indicated that the properties of bamboo charcoal change at different carbonizing temperature.

5.1 Bamboo charcoal's fixed carbon

Fixed carbon is a supposed conception, it is a ashless bamboo charcoal which burns without air under the high temperature of 850℃±20℃.

If the ash and volatilization content are known, then the fixed carbon content can be calculated with the formula blow:

$$C = 100 - (A + V)$$

Where: C - percentage of the fixed carbon (%)

V - volatilization content (%)

A - percentage of ash (%)

Due to the difference in terminal temperature and pyrolysis method, bamboo charcoal could contain fixed carbon from 60%t to 93%. The corresponding percentage of fixed carbon in bamboo charcoal will increase with the rising of carbonizing temperature. We can see from Table 3 and Fig.40 the corresponding percentage of fixed carbon will increase dramatically with the rising of carbonizing temperature before the temperature reaches 600℃. However, it will change little after the temperature reaches 600℃

The percentage of fixed carbon in bamboo charcoal grade1 made at medium and high temperature is more than 88%, and grade 2 more than 85%. For bamboo briquette charcoal, grade 1 is over 86%, and grade 2 over 82%.

The relationship between fixed carbon and terminal pyrolysis temperature is shown in Fig.29.

5.2 The content of volatile matter of bamboo charcoal

When heated under high temperature(850±20℃), the bamboo charcoal emits gaseous offspring such as CO, CO_2 H_2, CH_2 and other hydrocarbon which are called as volatile matter. Measurement of volatile matter complies with ASTM standard D1762 –84 (R2001)

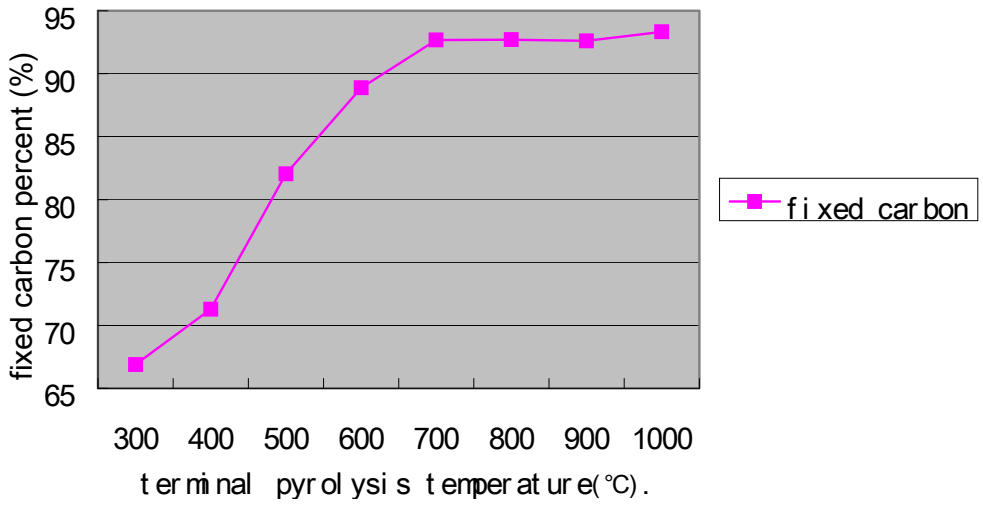

Figure 29 relationships between fixed carbon content and terminal pyrolysis temperature

Standard Test Method for Chemical Analysis of Wood Charcoal. The measure procedures are as follows: Heat the muffle furnace to 950℃. Preheat the crucibles used for the moisture determination, with lids in place and containing the sample, as follows: with the furnace door open, for 2 min on the outer ledge of the furnace (300℃) and then for 3 min on the edge of the furnace(500℃)(Note 3). Then move the samples to the rear of the furnace for 6min with the muffle door closed. Watch the samples through a small peep-hole in the muffle door, if sparking occurs, results will be in error (Note 4). Cool the samples in a desiccator for 1 h and weigh.

Note 3 -- Individual nichrome wire baskets to hold the crucibles are convenient.

Note 4 -- If the sparking sample does not check the results of its nonsparking duplicate within ±0.5%, the analysis shall be repeated.

Calculate the percentage of volatile matter in the sample as follows:

$$\text{Volatile matter, \%} = [(B - C) / B] \times 100$$

where:

B = grams of sample after drying at 105℃

C = grams of sample after drying at 950℃

Fig.30 presents the relationship between volatile matter in bamboo charcoal and the terminal pyrolysis temperature. It can be seen in Fig.30 that the volatile matter percentage decreases from 30.38% to 2.11% with the rising of pyrolysis temperature, the volatile matter percentage decreased rapidly with the rising of temperature up to 600℃, this might be caused by the almost completed volatilization of the volatile matter at the temperature below 600℃.

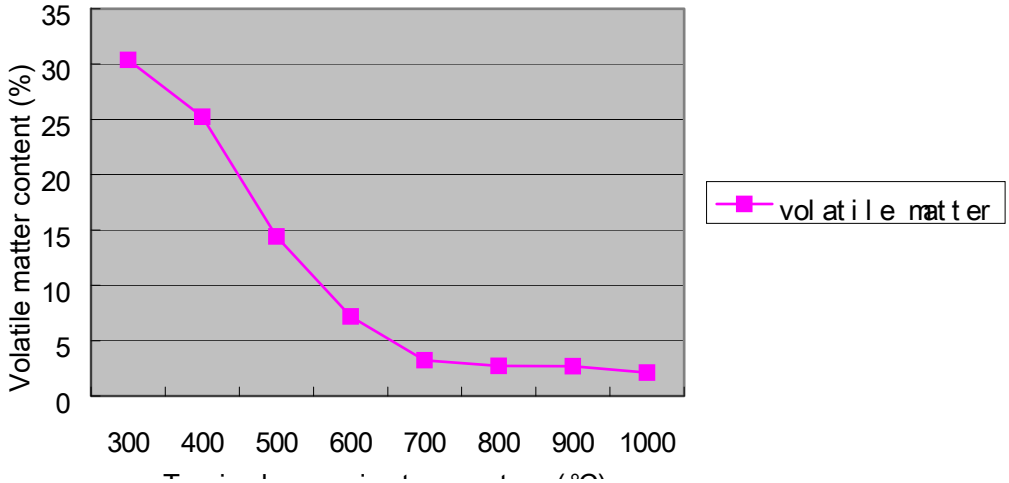

Figure 30 Volatile content changes with pyrolysis temperature

For the bamboo charcoal made in medium and high temperature, the volatile matter content should be less than 8%. In the final phase of making bamboo charcoal, it's very important to keep the equipment sealed during calcining and cooling, otherwise, it will influence greatly the volatile matter percentage. Because under heating condition, bamboo charcoal will absorb large amount of oxygen, at the same time, produce a lot of surface oxygenate. The process is not necessary to be carried out under very hot condition, and it will be enough when the temperature reaches 200℃ to 300℃.

5.3 Ash of bamboo charcoal

The ash of bamboo charcoal is its inorganic constituent, which is a white or shallow red substance after bamboo charcoal has been burned completely at high temperature to convert into. Shown in Fig.31, the ash percentage in bamboo charcoal increases from 2.93% to 4.69

% with the rising of pyrolysis temperature. The ash elements in bamboo charcoal are complex, all the inorganic components in bamboo will remained in ash, among which Si, K, Mg, Na, Mn, etc are relatively more.

In accordance with the standard ASTM D1762-84 (R2001) Standard Test Method for Chemical Analysis of Wood Charcoal, the measure procedures are as follows: Place the lids and the uncovered crucible used for the volatile matter determination, and containing the sample in the muffle furnace at 750℃ for 6h. Cool the crucibles with lids in place in a desiccator for 1 hour and weigh. Repeat burning of the sample until a succeeding 1 h. period of heating results in a loss of less than 0.0005g. Calculate the percentage of ash in the sample as follows:

$$\text{Ash, \%} = (D / B) \times 100$$

Where:

B = grams of sample after drying at 105℃

D = grams of residue

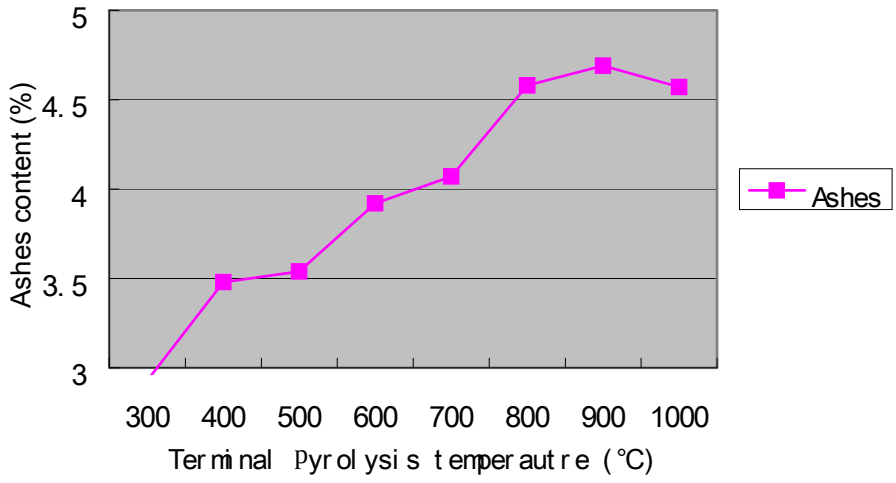

Figure 31 relationships between phrolysis temperature and ash content

5.4 The mechanical strength of bamboo charcoal

The mechanical strength of bamboo charcoal indicates its ability against squeezing and abrasion. It is of great significance in shifting, landing and transportation. It will change distinctly with the pressed direction, the terminal phrolysis temperature and the speed of drying and carbonization, especially the carbonizing speed during exothermic reaction.

5.5 The density of bamboo charcoal

The density stands the mass of unit volume of bamboo charcoal. It is expressed by the following formula:

$$P = \frac{m}{V}$$

Where: P — the density of bamboo charcoal (g / cm^3)

M — the mass of bamboo charcoal (g)

V — the volume of bamboo charcoal (cm^3)

Because bamboo charcoal is a sort of porous material, its density can be expressed in three types, e.g. filling density (P_B), particle density (P_p), and real density (P_t).

Particle density stands the mass of unit volume of bamboo charcoal, which only contains cavity volume in bamboo charcoal, measured under a prescriptive condition.

Real density is also called absolute density that stands the bamboo charcoal of unit volume excluding the cavities in the charcoal and the interspaces volume between particles under a prescriptive measuring condition.

5.5.1 Filling density (P_B)

Filling density means the mass of unit volume of bamboo charcoal measured under a prescriptive condition. It includes the cavity volume in bamboo charcoal and the interspaces between particles expressed by the following formula:

$$P_B = \frac{m}{V_p} = \frac{m}{V_g + V_h + V_t}$$

Where: P_B— filling density (g/cm^3)

m — the mass of bamboo charcoal (g)

V_p — the piling volume of bamboo charcoal (cm^3)

V_g — the gap volume among particles of bamboo charcoal (cm^3)

V_h — the hole volume inside the particles of bamboo charcoal (cm^3)

Vt — the real volume of bamboo charcoal (cm^3)

The filling density is usually measured by measuring cylinder method. It would change with the alteration of terminal pyrolysis temperature and the speed of heating (see Fig.32).

5.6 The electric conductivity of bamboo charcoal

The electric conductivity of bamboo charcoal will be reinforced with the rising of terminal pyrolysis temperature. When terminal pyrolysis temperature reaches 700℃, the resistance in bamboo charcoal becomes very small, only 5.40×10^{-6} Ω . M, meaning good conductivity. Compared with wood charcoal (see Fig.33), bamboo charcoal is far better in electric conduction. The reason maybe the ash in bamboo charcoals is more than that in wood charcoal.

As shown in Fig.33, the resistance rate of bamboo charcoal reduced apparently before the carbonizing temperature reaches 700℃, while above 700℃ the reduction speed descended. Probably, this is because the volatile in bamboo charcoal released completely at that temperature.

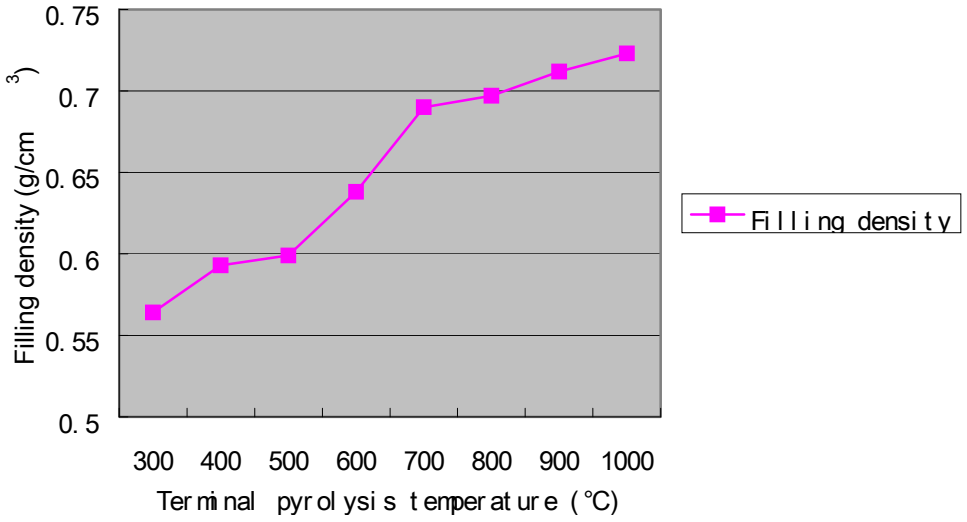

Figure 32 relationships between filling density and terminal pyrolysis temperature

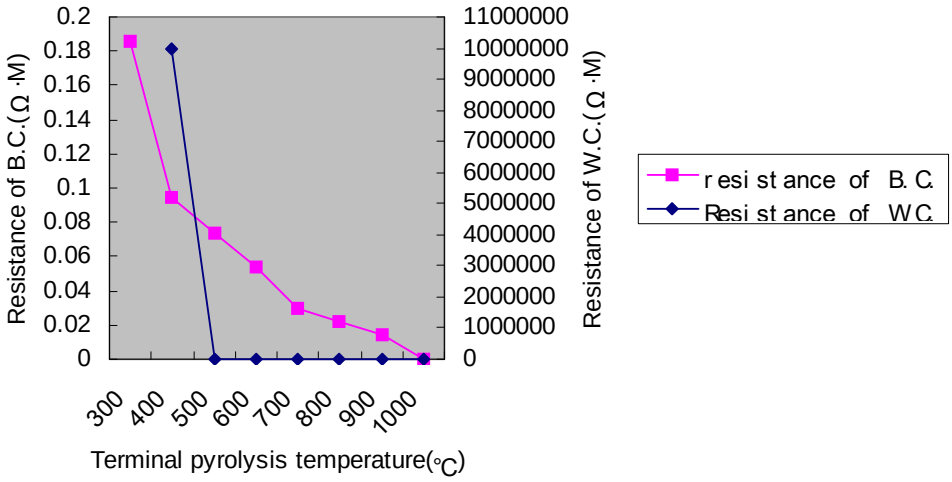

Figure 33 relationships between resistance of bamboo charcoal and terminal pyrolysis temperature

Different target use requires different electric conductivity of bamboo charcoal. High temperature bamboo charcoal has excellent electric conductivity and can be used for shielding electromagnetism.

5.7 The specific surface area of bamboo charcoal

The surface area of bamboo charcoal in 1 gram is called specific surface area of bamboo charcoal that is determined by the inner area of holes. It is one of important parameters that indicates the macrostructure of bamboo charcoal and reflects the reaction and adsorption

abilities. Like wood charcoal, in high temperature, all kinds of porosities will form inside bamboo charcoal, which bring bamboo charcoal a certain specific surface area, reaction and adsorption capacity. The relationship between specific surface area and pyrolysis temperature is shown in Fig.34.

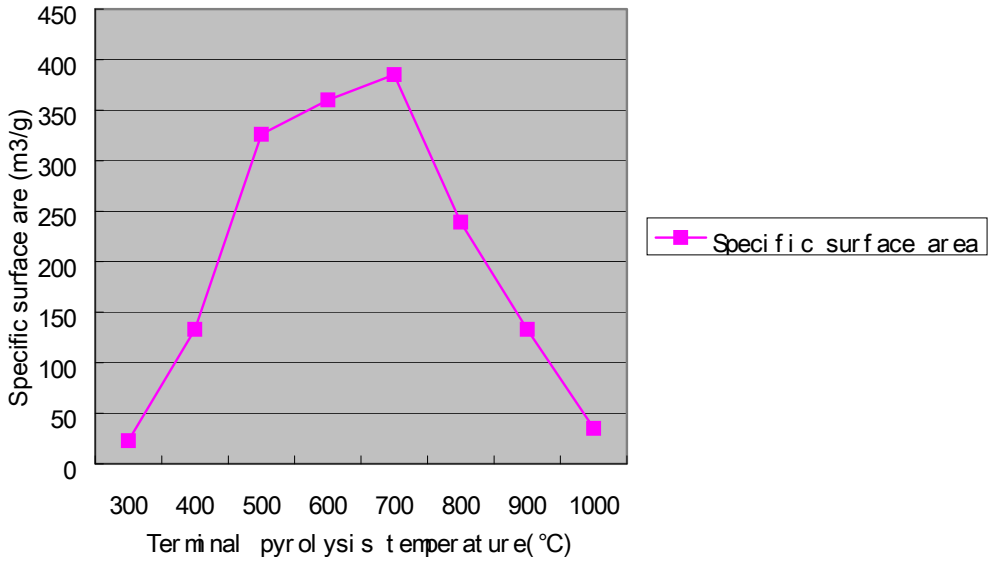

Figure 34 relationships between specific surface area of bamboo charcoal and terminal pyrolysis temperature

The maxim specific surface area ($385m^3/g$) is formed when the pyrolysis temperature reaches 700℃, the specific surface area value is much smaller when pyrolyzing under lower temperature (<500℃) due to the less porosity resulted from incomplete carbonization. Under higher temperature (>800℃), the porosity reduces too, the reason might be that some cavities have been burned and the surface area corresponding reduced. So when carbonizing temperature reaches 1000℃, the surface area value is small too.

There are different methods to measure the specific surface area; the BET capability way is most popular.

6 Factors influencing bamboo pyrolysis process

6.1 The terminal temperature of bamboo pyrolysis

The terminal temperature of bamboo pyrolysis has great influence on the output and composition of bamboo pyrolysis products. The results of experiments demonstrated that the output of bamboo charcoal descends as the pyrolysis temperature goes up, and the descending speed at the temperature below 400℃ is more distinct than that above 500℃.

The yield rate of bamboo charcoal descends while the pyrolysis temperature goes up, but the relative content of fixed carbon in bamboo charcoal increases. The yield rate of the liquid products and gas products are increased with the temperature raising. (see Fig.39).

The specific surface area of the bamboo charcoal is the biggest ($385m^2/g$) at pyrolysis temperature 700℃. The specific surface area increases with the pyrolysis temperature going up till 700℃, then it descends with the pyrolysis temperature going up further. The temperature can't be too high for producing the bamboo-based activated carbon (see Fig.34).

6.2 The speed of pyrolysis

The speed of pyrolysis influences the productivity of pyrolysis equipment. In other words, high pyrolysis speed and low processing time can increase the utilization ratio of the pyrolysis equipment. The speed of pyrolysis is influenced by the speed of heating, the dimension and quality of raw material, the pyrolysis method and the carbonizing equipment, etc.

The bamboo vinegar's output has a distinct increase and the bamboo charcoal's output remarkably decreases in high-speed pyrolyzing process. It might be the reason that the second reaction during the pyrolyzing process may reduce.

When the exothermic reaction of raw material is taking place rapidly, a great quantity reaction gas emits abruptly from the bamboo vessel causing cracks that will reduce the mechanical strength of bamboo charcoal (Huang 1996).

6.3 The moisture content of bamboo

The moisture content of bamboo directly influences the pyrolysis time and the consumption

of fuel. The drying period of bamboo pyrolysis will prolong if the moisture content is too high, and as a result, the carbonizing process will extend with more fuel consumption. On the other hand, the bamboo culms are easy to cause cracks because of not being heated uniformly in the pyrolyzing kettle when drying rapidly, and this degrades bamboo charcoal. At the same time, the concentration of bamboo vinegar becomes lower and will increase the consumption of fuel while the bamboo vinegar is further treated.

The lower moisture content of bamboo speeds up the bamboo pyrolysis process. But the output of bamboo charcoal will be decreased and its mechanical strength reduced by the vigorous exothermic reaction if the moisture content of bamboo is too low.

So suitable moisture content of bamboo is important for pyrolysis, and the 15%~20% moisture content of bamboo is favorable for carbonization in an outside-heating pyrolyzing kettle.

6.4 Bamboo’s dimensions

Because of low thermal conductivity, the bigger dimension of bamboo pieces, the longer period of time it will be taken for the gas compounds emitting. Due to much subsidiary reaction that can cause loss during the pyrolyzing process, the output of bamboo charcoal will be reduced. It should be mentioned that bamboo material’s conductivity value is low, and should consider how to speed up the heating process uniformly.

7 Adsorption capacity of bamboo charcoal

Adsorption capacity of bamboo charcoal is an important one of its characteristics. Because bamboo charcoal forms a lot of pores after pyrolyzed under high temperature, which is similar to wood charcoal, it has adsorption capacity with big specific surface area (for example, its specific surface area reaches 385 ㎡/g when it is carbonized at 700℃).

In order to study bamboo charcoal's capacity for adsorbing harmful gas, five kinds of representative harmful substances, that is methanal, anmonin, benzene, methylbenzene, and chloroform were chosen and the static method that measures the adsorption ratio of bamboo charcoal in airtight surroundings was applied to determine the adsorption effect of bamboo charcoal made at different carbonization temperature (300℃ ~ 1000℃).

7.1 Methanal adsorption capacity of bamboo charcoal

Methanal (HCHO), boiling point is 21℃, its aqueous solution of 30% to 40% is named as Formalin that volatilizes easily. The capacity of bamboo charcoal to adsorb methanal is illustrated in table10 and Fig.35 As shown in table10 and Fig.47, it could be seen that bamboo charcoal has a certain capacity to adsorb methanal, and the charcoal made at 900℃ was the best, its adsorption rate to methanal reached 19.39 percent. The adsorption rate of other charcoals made at different temperature was over 16 percent in the experimental period. This demonstrated that the influence of pyrolysis temperature on the adsorption rate of bamb vity of bamb

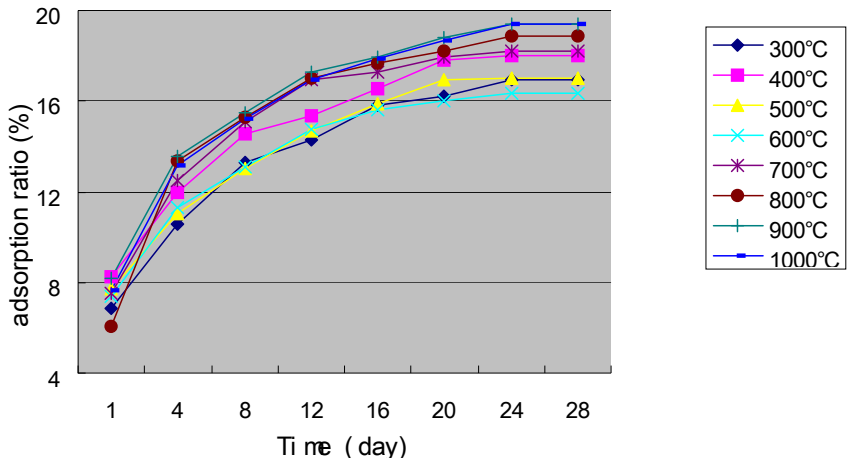

Figure 35 Adsorption ratio of bamboo charcoal made in different temperature to methanal

7.2 Benzene adsorption capacity of bamboo charcoal

Molecular formula of benzene is C_6H_6 with boiling point 80.1℃, volatile. Bamboo charcoal's adsorptive ratio to benzene is illustrated in Fig.36.

As shown in Fig.36, the adsorption rate of bamboo charcoal to benzene reached an equilibrium quickly. The adsorption rate of bamboo charcoals carbonized under the temperature of 500℃, 600℃ and 700℃ raised to a high level of 10.08%, 9.65%, and 8.69% in one day respectively. This demonstrated that the speed of adsorption of bamboo charcoal for benzene was rather rapid.

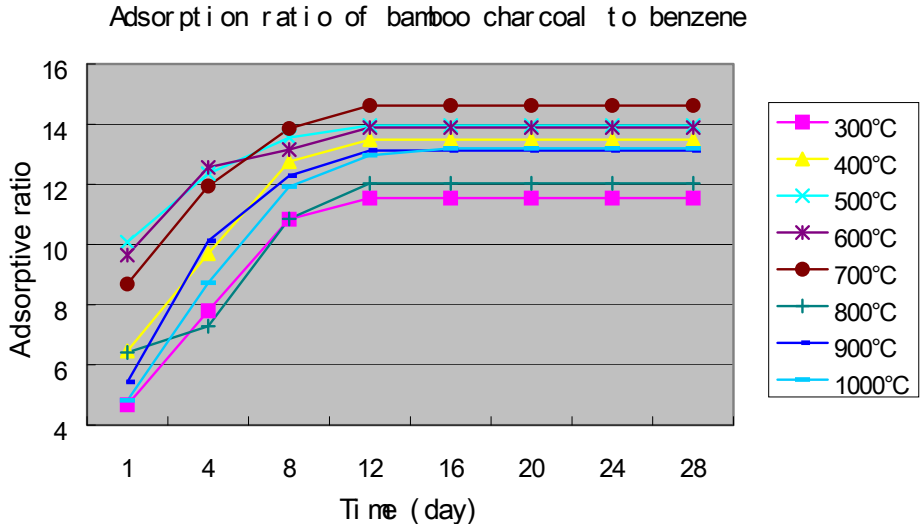

Figure 36 Adsorption rate of bamboo charcoal made in different temperature to benzene

7.3 Methylbenzene adsorption capacity of bamboo charcoal

Methylbenzene(C_6H_8), boiling point 110℃, volatile. Bamboo charcoal's adsorption rate to methylbenzene was illustrated in Fig.37

Illustrated in Fig.37, the adsorption rate of bamboo charcoal to methylbenzene is similar to that of bamboo charcoal to benzene. In other words, When carbonization temperatures were 500℃, 600℃, and 700℃ respectively, the adsorption of bamboo charcoals was quite fast.

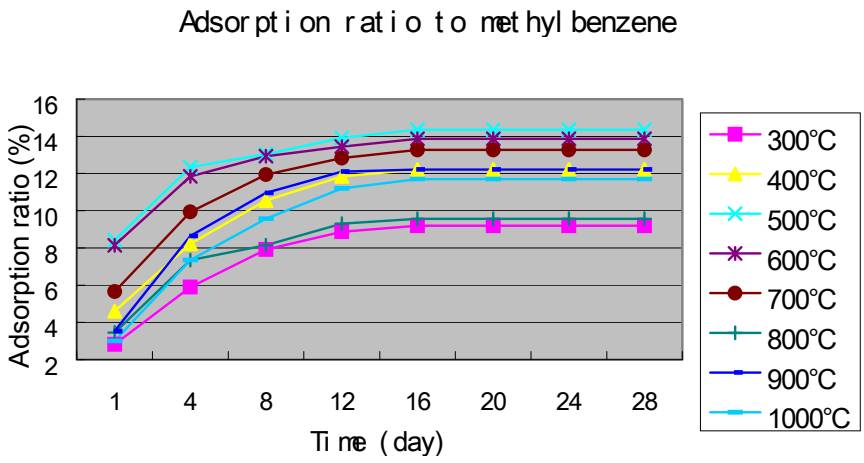

Figure 37 Adsorption ratio of bamboo charcoal made in different temperature to methylbenzene

7.4 Bamboo charcoal's adsorption to ammonia

Ammonia (NHS), boiling point – 33.5℃, volatile. Bamboo charcoal's adsorption rate to ammonia was illustrated in Fig.38.

Shown in Fig.38, it could be found that the bamboo charcoal carbonized at lower temperature, such as 300℃ or 400℃, has good adsorption ratio to ammonia. The adsorption ratio of the bamboo charcoal made in 300℃ and 400℃ to ammonia reached 35.65% and 22.73% respectively and lasted for a relatively longer period of time.

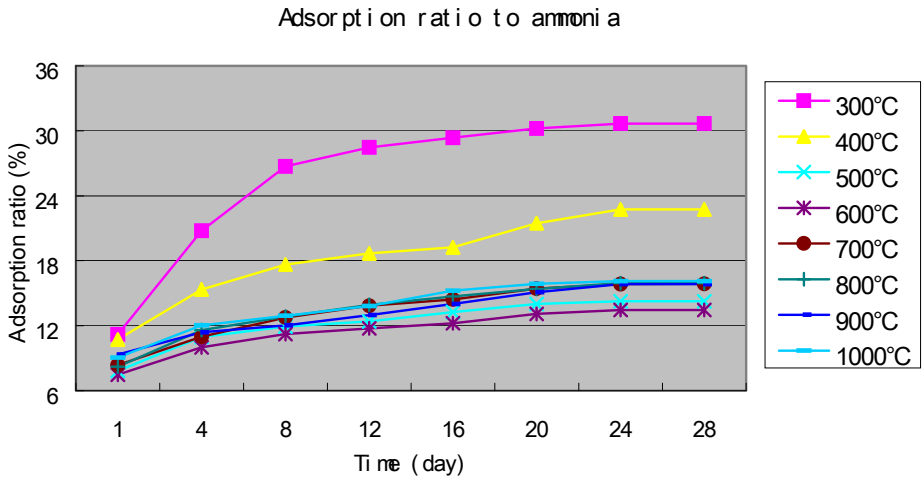

Figure 38 Adsorption ratio of bamboo charcoal made in different temperature to ammonia

7.5 Bamboo charcoal's adsorption to chloroform

Chloroform ($CHCl_3$), boiling point 61.2℃, volatile. Bamboo charcoal's adsorption affinity to chloroform is illustrated in Fig.39

Shown in Fig.39, the adsorption ratio to chloroform of bamboo charcoal carbonized at lower temperature of 300℃ was very well to reach 40.68%. But there was a trend that the higher carbonization temperate, the lower adsorption ratio of bamboo charcoal to chloroform

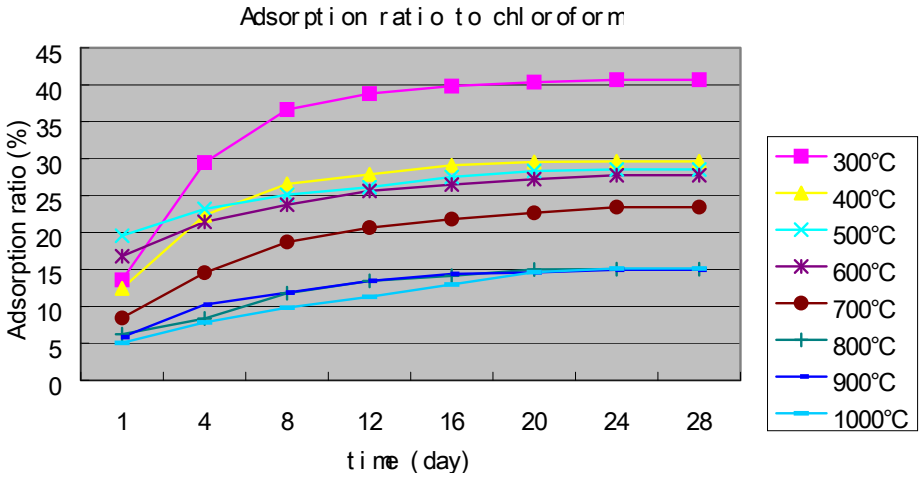

Figure 39 Adsorptive ratio of bamboo charcoal made in different temperature to chloroform

.

8 Utilization of bamboo charcoal

Because of a lot of pores and high specific surface area, bamboo charcoal has strong adsorption capacity. Meanwhile, its physical and chemical properties are very stable. It isn't soluble in water and other solvents. It demonstrates high stability in various working conditions except with strong oxidant in high temperature, for example, oxygen in high temperature, ozone, chlorine and salt of dichromate. So bamboo charcoal can be used both in a wide range of pH and in many solvents. Moreover, it can be used in the circumstances with high pressure and high temperature.

8.1 The exploitation of adsorption capacity of bamboo charcoal

8.1.1The use of bamboo charcoal indoor

8.1.1.1 Main sources of indoor air pollution

Due to the development of economic and improvement of society, more and more activities of human being such as work, study and entertainment are often performed indoor. But indoor environment is relatively closed and the air is polluted. The main sources of indoor pollution are indoor decoration, human bodies and oil-smoke in kitchen.

(1) Indoor decoration

People are investing more and more money into indoor decoration to improve living environment. Meanwhile, tremendous wood panels and decorative stones are placed into houses. This means some harmful substances such as formaldehyde, ammonia, benzene etc mixing in indoor air. If the decorative products are of bad quality, the air pollution indoor might exceed the state standard regarding indoor decoration.

Formaldehyde is a colorless, gaseous compound used to make glue due to its adhesive and a certain pesticide and antiseptic capacity. Gaseous formaldehyde has strong stimulation to people. It comes from wood-based panels, plastic and furniture when a house has just decorated. The results of studies demonstrate that when indoor formaldehyde content is 0.1 mg/m^3 people feel odor and uncomfortable; when it is $0.5mg/m^3$, people will be stimulated to tear, when it reaches $0.6mg/ m^3$, the throat of people will be uncomfortable or irritated; with higher content, it can cause illness, emesis, cough, suffocation and emphysema pulmonary. When formaldehyde content in air is $30mg/m^3$, it can cause death. People contacted with lower dose formaldehyde for long time, might suffer from chronic respiratory diseases, illnesses of female, bad newly born babies, chromosomal anomaly, even a nasopharyngeal cancer. To control indoor formaldehyde polluting, besides selecting good material for decoration, and ventilating house, we can use bamboo charcoal for its good adsorption because formaldehyde's releasing period ranges from 3 to 15 years.

Ammonia in house comes from cement antifreeze additive. Ammonia stimulates eyes and breathing channel.

Painting and coating give out benzene and so on, which are harmful to blood forming organ of human body. At the beginning of touching benzene, persons show the symptoms of leukocyte continuous decrease and dizziness, but a person might suffer from cancer if he contacts with it for a long time.

(2). Human body

Human being respires air that is exchanged in lung, from it carbon dioxide and other harmful substances are exhaled. Study results show that people excrete beyond 20 harmful substances by breathing, sweating urinating and defecating. So people often feel dizziness, difficulty in breath, even suffocation, illness in a crowded unventilated house.

The smog smokers give out is also an important source of indoor air pollution. Active ingredients of tobacco are decomposed at high temperature, and sometime they also form new chemical substances. It is demonstrated that there are tens of substances harmful to human body by analyzing the components in smog. For example, carbonic oxide, ammonia, formaldehyde, benzopyrene, nicotine, tar etc are found in smog. These are severely harmful to human organ.

(3). Oil-smoke in kitchen

Burning LPG that residents use daily consumes oxygen and gives out carbonic oxide, carbon dioxide, nitrogen oxide, aldehyde, benzopyrene and so on. Vegetable oil gives out volatilizing chemical compounds (for example: acrylic acid) when it is heated at high temperature. These chemical compounds diffuse indoor and are harmful to human body.

8.1.1.2 Preventing indoor air pollution

There are two kinds of ways for improving indoor air. The first is to use environment friendly material. The second is to use indoor deodorizer correctly.

Research results demonstrate that bamboo charcoal is a good product of indoor deodorizer because of good adsorption, long effective period to indoor harmful material and being regenerative and reusable easily. If product of bamboo charcoal is modified, its effect will be better.

8.1.2 The use of bamboo charcoal in purifying water

All knows the seriousness of water pollution. To protect environment, it is an important task to dispose wasted water and drinking water.

8.1.2.1 Bamboo charcoal adsorbs 2,4-dichloro-hydroxybenzene

2,4-dichloro-hydroxybenaene is one of the main organism pollution in drinking water. Study on the purifying water capacity indicates that the adsorption properties of bamboo charcoal on 2,4-dihydroxybenene are favorable.

(1) Material and Methods

Test material includes bamboo charcoal which is ground into particle with diameter of 0.06~0.9 mm, 2,4-di-hydroxybenzene for analysis, and analytic ether.

Test process is made of 3 steps:

a. Compounding of standard 2,4-di-hydrobenzene solution: 0.0101g 2,4-di-hydroxybenzene is dissolved into 100ml ether in a volumetric flask, then shook up and placed in a refrigerator.

b. Static balance adsorption is adopted in the test: 0.02~1.000g bamboo charcoal particle is added into 2,4-di-hydroxybenzene solution with different concentration contained in 250ml conical flasks, then they are shook up and laid in vibrating machine keeping in 20 ℃ for a while so as to filter them easily. Finally the solution is filtered by ether twice, and 50ml. constant volume solution is ready to measure the content of 2,4-di-hydrobenzene in it with gas chromatograph.

c. Gas chromatography measurement: the instruments and test conditions are as follows: HP5890 GAS CHROMATOGRAPH (electron capture detector), quartz capillary column (inner diameter 0.53mm, 10m long, solution film thickness 2.65um) with temperature 95 ℃; Vaporization room temperature of gas chromatograph keeps 150℃ and test room 250℃; Feed speed of N_2 is 30.5ml/min and 1uL.sample volume is entered.

(2) Results and Discussion

ⅰ Dynamics of bamboo charcoal adsorption reaction to 2,4-di-chloro hydroxybenzene

Chart 1 is the kinetics curve of bamboo charcoal adsorption reaction to 2,4-di-chloro hydroxybenzene. It shows that adsorption volume of 2,4-chloro di-hydroxybenzene increases with treatment time. At the same time, the adsorption speed of 2,4-di-chloro hydroxybenzene by bamboo charcoal is fast at the beginning of adsorption, then becomes constant in 30 minutes, finally declines. According to the results the relation of adsorption volume of bamboo charcoal and 2,4-di-chloro hydroxybenzene can be expressed as the following equation

$$\text{Ln } C=-0.896-0.00185t$$

Where the coefficient of correlation is r=0.863. The equation shows that the adsorption of 2,4-di-hydrobenzene by bamboo charcoal accords with the first order reaction dynamics. The action between bamboo charcoal and 2,4-di-chloro hydroxybenzene caused mainly by

van der Waals force.

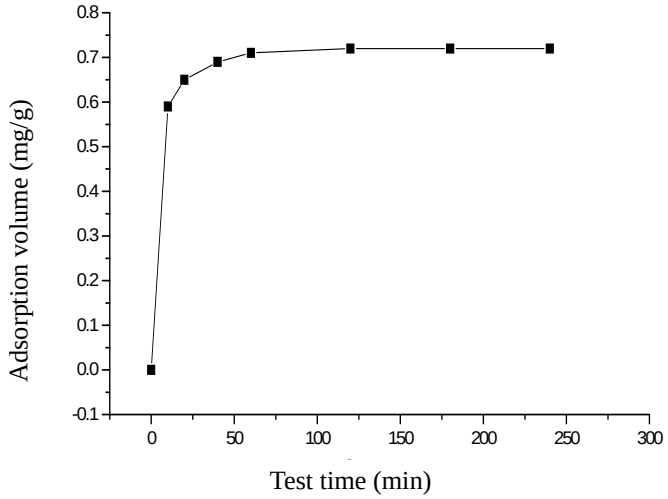

Fig. 40 Effect of treatment time with bamboo charcoal on adsorption volume of 2,4-di-chloro hydroxybenzene

ii Effect of the various concentration of 2,4-di-chloro hydroxybenzene on adsorption volume

It is shown in Fig.41 that volume of 2,4-di-chloro hydroxybenzene absorbed by bamboo charcoal shows good linear relation with concentration of 2,4-di-chloro hydroxybenzene. It indicates that bamboo charcoal has good nature of adsorption of 2,4-di-chloro hydroxybenzene that is shown in table 2. With 1.0g of bamboo charcoal in this test, the maximum adsorption volume of 2,4-di-chloro hydroxybenzene is 1500mg. When concentration of 2,4-di-chloro hydroxybenzene solution is in the range of 2.5mg/L~640mg/L, the adsorption rate of 2,4-di-chloro hydroxybenzene absorbed by bamboo charcoal is between 88.2% and 99.2%.

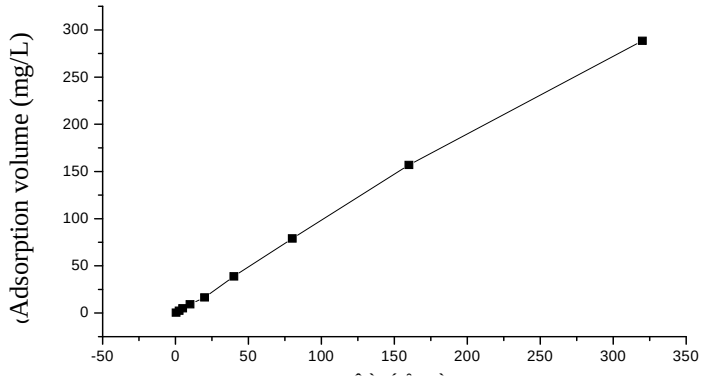

Fig.41The relation of adsorption volume and concentration of 2,4-di-chloro hydroxybenzene

Table 2 Adsorption rate of 2,4-di-chloro hydroxybenzene in bamboo charc solution

No.	Concentration of 2,4-di-chloro hydroxybenzene (mg/L)	Test value (mg/L)	Adso (	vity
1	2.5	0.02	9	
2	40	1.2	9	
3	160	3.1	9	
4	640	69.1	8	

iii Effect of diameters of bamboo charcoal particle on adsorption of 2,4-di-chloro hydroxybenene

Size of bamboo charcoal particle samples ranges from diameter 0.06mm to 0.90mm which is divided into four grades, the first grade 0.8mm~0.9mm, the second one 0.25mm~0.35mm, the third one 0.15mm~0.155mm, and the last one 0.055~0.06mm. The solution concentration of 2,4-di-chloro hydroxybenzene is 1mg/L with pH value 6.4. The quantity of bamboo charcoal sample is 0.2g. The temperature in test keeps 20℃. The results are shown in table 3.

Table 3 Function of different diameters of bamboo charcoal particle

Size of bamboo charcoal particle/mm	Particle size grade	Adsorption (mg/g)	Absorptivity (%)
0.8-0.9	1	1.1	22
0.25-0.35	2	1.7	34
0.15-0.155	3	2.5	50
0.055-0.06	4	4.9	98

iv Effect of pH value on adsorption of 2,4-di-chloro hydroxybenene. The results of the trial with different acid value are given in Fig.42. We can see, under the test conditions bamboo charcoal has good ability of absorbing 2,4-di-chloro hydroxybenzene. As the pH value is at the range of 2.0~10.0, the adsorption rate of 2,4-di-chloro hydroxybenzene reaches 99%.

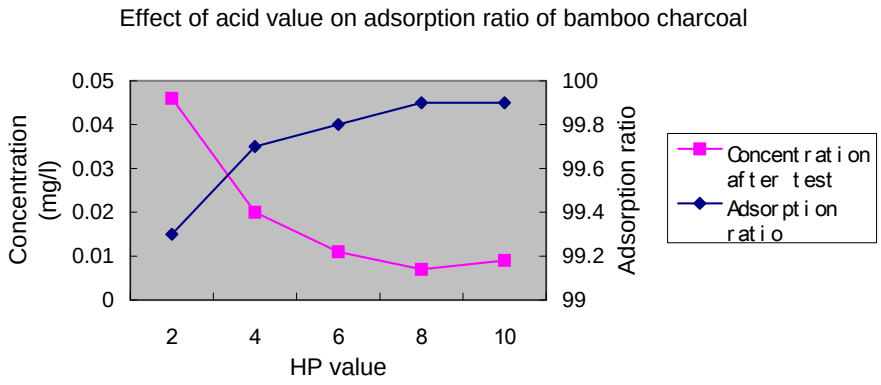

Figure 42 Effect of acid value on adsorption ratio of bamboo charcoal

v Conclusions

(1) Bamboo charcoal has good capability for absorbing 2,4-di-chloro hydroxybenzene from water, whose reaction abide by the first order reaction kinetics.

(2) Under this test conditions, the maximum amount of 2,4-di-chloro hydroxybenzene absorbed by bamboo charcoal reaches 1500mg/L

(3) The adsorption properties of bamboo charcoal on 2,4-di-chloro hydroxybenzene are closely related with size of bamboo charcoal particle, specific surface area, and adsorption temperature.

(4) When the acid value is at range of 2~10, bamboo charcoal has good properties on absorbing 2,4-di-chloro hydroxybenzene.

8.1.2.2 Use of bamboo charcoal in cooking and boiling

Bamboo charcoal not only eliminates harmful substances such as surplus chlorine, chloroform etc., but also contains rich natural mineral, for example, potassium, magnesium, sodium, calcium etc. Study result shows that if bamboo charcoal is dipped in water, metal ion can be dissolved out. (Table4). So water quality can be improved when bamboo charcoal is used in cooking and boiling.

Table 4. Result of metal ion dissolving out in bamboo charcoal (mg/l)

	K	Na	Al	Mg	Ca
First dissolved	11.4	0.84	0.032	0.079	0.5
Second dissolved	6.1	0.82	0.02	0.055	0.37
Third dissolved	5.6	0.78	0.02	0.053	0.2

8.1.2.3 Use of bamboo charcoal in adjusting humidity

Because bamboo charcoal is activated under the condition of very little oxygen and high temperature, it contains almost no water and has a lot of pores. This makes its high effectiveness in adjusting humidity. When humidity of surroundings overtakes that of bamboo charcoal, bamboo charcoal can adsorb mass of moisture from air. When humidity of surroundings becomes lower than that of bamboo charcoal, it can give out moisture into air to keep a dynamic equilibrium. So bamboo charcoal is usually used to make different health care products for adjusting micro-surroundings of human beings. In practice, bamboo charcoal is usually laid under indoor floor or placed behind wallboards.

8.2 Using the emitting infrared ray property of bamboo charcoal

Because of the nature of emitting infrared ray, bamboo charcoal can be used in health care. Massaging bodies with bamboo charcoal is favorable to promote blood flowing. Putting it into oil not only can fry delicate food but also can prevent the oxidization of oil. Sinking bamboo charcoal into a piscine before bathing, when water temperature rises, the wavelength of bamboo charcoal will become short and the quantity of heat it absorbed will enlarge. So persons absorb the infrared ray coming from the bamboo charcoal to warm themselves. Fig 43, Fig.44, and Fig.45 show some of the products used in living.



Figure 43 a mattress filled with bamboo charcoal inside



Figure 44 a set of seating with bamboo charcoal inside for automobiles



Figure 45 pillows filled with bamboo particle charcoal inside

8.3. Use of bamboo charcoal in deodorant and preservative

Refrigerators are used to store fresh foods. Their capacities are so big that they store almost all kinds of food ranged from crude food to ripened food: vegetable, fruit, fresh fish, meat and so on. Although refrigerators are designed considerately, for example, it has many departments, but it is not able to exclude mixed odor because of the cold air flowing. If we use bamboo charcoal or its modified product in a refrigerator, the mixed odor can be excluded for its adsorption action. The outlines of a kind of refrigerator odor adsorbent and insoles are shown in Fig.46 and Fig.47. At the same time, because of bamboo charcoal's effect of adjusting humidity, it can prolong the preservative period of vegetable and fruit. Moreover, bamboo charcoal can be reused after washing and sunning.



Figure 46 a kind of refrigerator odor adsorbent filled with bamboo charcoal



Figure 47 insoles laid with bamboo charcoal inside

8.4 Other use of bamboo charcoal

8.4.1 Bamboo charcoal is activated to produce bamboo active carbon.

Being a good adsorbent, active carbon can be used as a decolourant and purifier in food、medicine, chemical industry, environment protection, and military engineering. Demand of its market is increasing. Wood is a sort of material for making active carbon, but the productivity of wood is decreasing because of the efforts for preserving forest. So it is an important subject to develop new material, which can be used to produce active carbon at present. Bamboo is a fast growing grass plant distributed in many areas worldwide. The quality of bamboo charcoal is similar to that of wood charcoal. So bamboo charcoal can be activated to produce bamboo active carbon. Activation process in lab was as follows (Wu et al 1999):

Bamboo charcoal (which is carbonized at 500℃) was activated at 900℃ by conducting steam to get good bamboo active carbon. The main adsorption index was as follows:

Adsorption value of iodine (mg/g): 1000

Adsorption value of methylene blue (mg/g): 180

Yield rate of active carbon (%): 30

8.4.2 Use of bamboo charcoal in conductivity

The conductivity of bamboo charcoal produced at different carbonizing temperature differentiates greatly. Bamboo charcoal gets very little resistivity, high conductivity and effect of electromagnetic shield when it is carbonized at 700℃. The relationship between the conductivity of bamboo charcoal and its carbonizing temperature, porosity, and degree of graphytization are to be studied.

9 Production costs and productivity effect of bamboo charcoal and briquette charcoal

9.1 Production costs and productivity effect of bamboo charcoal

9.1.1 Direct production costs of bamboo charcoal

Direct production costs of bamboo charcoal are estimated to USD 572.7 per ton shown in Table 5.

Table 5 Estimate of direct production cost (Unit：USD/ ton of finished product)

Direct cost item	Amount of money	Remark
Moso bamboo	363.6	Bamboo price: 60.6 USD/ton; Bamboo consumed: 6 ton / ton finished product
Firewood	60.6	Firewood value: 60.6 USD/a kiln / a cycle
Electricity For productive use	15.09	150 kwh / ton of finished product， 0.1 006USD / kwh
Labor	60.6	For taking cure of kilns
Carriage	12.12	For short distance
Packaging	60.6	Including packaging material and wages
Sum	573.61	

9.1.2 Profit assessment

(1) Plant capacity

The scenario of a plant capacity is to produce 360 tons of bamboo charcoal a year, and at the same time to get the by-product (72 ton bamboo vinegar per year) per year. For this target, it is planned to build 30 charcoal brick kilns, each one will produce 1 ton of bamboo charcoal plus 200 kilogram of bamboo vinegar in a cycle (25 days/ a cycle and 300 working days per year).

(2) Total investment for building the plant

Total investment is about USD 135,890 as follows:

- It is estimated that initial fixed assets investment would be USD 29,100. One year is needed for construction and start-up (table 6).

- It is estimated that net working capital would be USD 106,790 shown in table 7

Table 6 Estimate of fixed investment cost (unit: USD 1000)

Item	Quantity	Unit price	Amount of money	Remark
Kiln Construction	30 Units	0.606	18.18	Equipment and cost of civil workers and materials for construction
Auxiliary	30 Units	0.364	10.92	Auxiliary installation and work shed etc.
Total		0.970	29.1	

Table 7 Calculation of working capital (Unit: USD 1000)

Number	Item	Minimum days for coverage	Coefficient of turnover	Full capacity
1	**Current assets**			**127.64**
1.1.	Accounts receivable	60	6	68.37
1.2.	Inventory			58.55
1.2.1	Material			
	Moso bamboo	45	8	16.36
	Packaging	30	12	0.727
1.2.2	Firewood	20	18	1.21
1.2.3	Work-in-progress	20	18	12.49
1.2.4	Finished products	35	10	21.82
1.2.5	Others			5.94
1.3.	Cash in hand	30	12	0.727
2	**Current liabilities**			**20.85**
2.1.	Accounts payable	35	10	20.85
3	**Net Working Capital**			**106.79**

(3) Sources of finance

The sponsors of the project will fund initial fixed assets investment of USD 29,100. Net working capital USD 106,790 will be loaned from a bank (according to the latest List of Interest Rate, 180 days, to calculate interest on loan). It is listed in table 8.

(4) Annual production - cost and income estimates

a. Parameters

- Product price (bamboo charcoal): USD 969.7 /ton.

Table 8 Sources of finance（Unit：1000USD）

Item	Local currency	Remark
Equity	29.1	by the sponsors
Loan	106.79	From commercial bank (Interest rate =5.841%)
Total	135.89	

- Product price (bamboo vinegar): USD 848.5 /ton (at present this kind of market price ranges from USD 848.5 /ton to USD 969.7 /ton.
- Fixed assets are depreciated according to the method of straight line (depreciation period 5 years), no remaining value.
- Sales taxes include: added value tax: 17%, super tax of construction and maintain for town: 3%，education super tax：3%；
- Rate of income tax: 33%.

b. Annual profit and loss of the project

It is forecasted that annual net income is about USD 943,300 (see table 9).

9.2 Bamboo briquette charcoal costs and revenue

9.2.1 Production costs

The costs of bamboo briquette charcoal are shown in table 10

9.2.2 Profit assessment

At present, the selling price (FOB) of bamboo stick charcoal of powder is USD400 per ton. So the gross profit reaches USD132 per ton and the gross profit rate is over 30%. All investment could be reclaimed during 2 to 3 years. It is obvious that building a factory to produce bamboo briquette charcoal would bring beneficial result in economy and society. But the investment of equipment is much larger than that of using brick kilns and will exceed USD 70,000 if the productivity of a plant is 360 tons per year. Moreover, the maintaining expense for equipment is also larger than brick kilns.

Table 9. Net income statement (Unit: 1000USD)

No.	Item	1	2	3	4	5	6	Sum
1	Sales	Build period	Product period					
1.1	Main product: bamboo charcoal		349.09	349.09	349.09	349.09	349.09	1745.46
1.2	By-product： bamboo vinegar		61.09	61.09	61.09	61.09	61.09	305.46
	Sum		410.18	410.18	410.18	410.18	410.18	2050.9
2	Direct Production Cost		**214.89**	**214.89**	**214.89**	**214.89**	**214.89**	**1074.45**
2.1	Moso bamboo		130.9	130.9	130.9	130.9	130.9	654.5
2.2	Firewood		21.82	21.82	21.82	21.82	21.82	109.1
2.3	Power		5.43	5.43	5.43	5.43	5.43	27.15
2.4	Labour		21.82	21.82	21.82	21.82	21.82	109.1
2.5	Carriage		4.36	4.36	4.36	4.36	4.36	21.8
2.6	Packaging (bamboo charcoal)		21.82	21.82	21.82	21.82	21.82	109.1
2.7	Carriage &. Packaging (bamboo vinegar)		8.73	8.73	8.73	8.73	8.73	69.84
3	Others		**9.09**	**9.09**	**9.09**	**9.09**	**9.09**	**45.45**
3.1	Depreciation		5.82	5.82	5.82	5.82	5.82	29.1
3.2	Repair		1.46	1.46	1.46	1.46	1.46	7.3
3.3	Sundry Charges		1.82	1.82	1.82	1.82	1.82	9.1
4	Operation Profit （1-2-3）		**186.2**	**186.2**	**186.2**	**186.2**	**186.2**	**93.1**
5	Interest on loan of Working Capital		6.23	6.23	6.23	6.23	6.23	31.15
6	Tax on sales		39.19	39.19	39.19	39.19	39.19	195.95
7	Gross profit （4-5-6）		**140.79**	**140.79**	**140.79**	**140.79**	**140.79**	**703.95**
8	Tax on income （33%）		46.46	46.46	46.46	46.46	46.46	23.23
9	**Net profit （7-8）**		**94.33**	**94.33**	**94.33**	**94.33**	**94.33**	**471.65**

Table 10 Cost list of per m^3 bamboo briquette charcoal (Unit：USD/ ton of finished product)

No.	Item	Unite price (USD)	Quantity	Amount (USD)	Note
1	Bamboo residual	12 per ton	3.5 ton	42	Arriving at factory
2	Electricity	0.96 per kwh	550 kwh	52.8	
3	Fuel			30	
4	Salary	3.6 per day	15 persons	54	8 for forming; 3 for kiln; 4 for load and package
5	Depreciation of equipment			24	Life-span of equipment is estimated at 7 years
6	Maintenance			12	
7	Management			24	
8	Package			24	
9	Short distance transport			5.3	
Total				268	

References

Zhou Fangchun. 1998. Bamboo forest cultivation. China Forestry Publishing House, Beijing, China

Ye, C.Y. et al. 1989. Integration utilization of bamboo resource, Shanghai Science and Technology Press, Shanghai, China

Zhang Qisheng et at. 1995. Industrial utilization of bamboo in China. China Forestry Publishing House, Beijing, China

Zhang Qisheng. 2002. Paying great attention on bamboo chemical utilization and developing bamboo charcoal; Journal of Nanjing Forestry University, 26(1), 1-4

Huang, L.X. 1996. Wood pyrolysis technology. China Forestry Publishing House, Beijing, China

Ye, C.Y. et al. 1989. Integration utilization of bamboo resource, Shanghai Science and Technology Press, Shanghai, China

Huang, L.X. 1996. Wood pyrolysis technology. China Forestry Publishing House, Beijing, China